VAC3000 Wiring

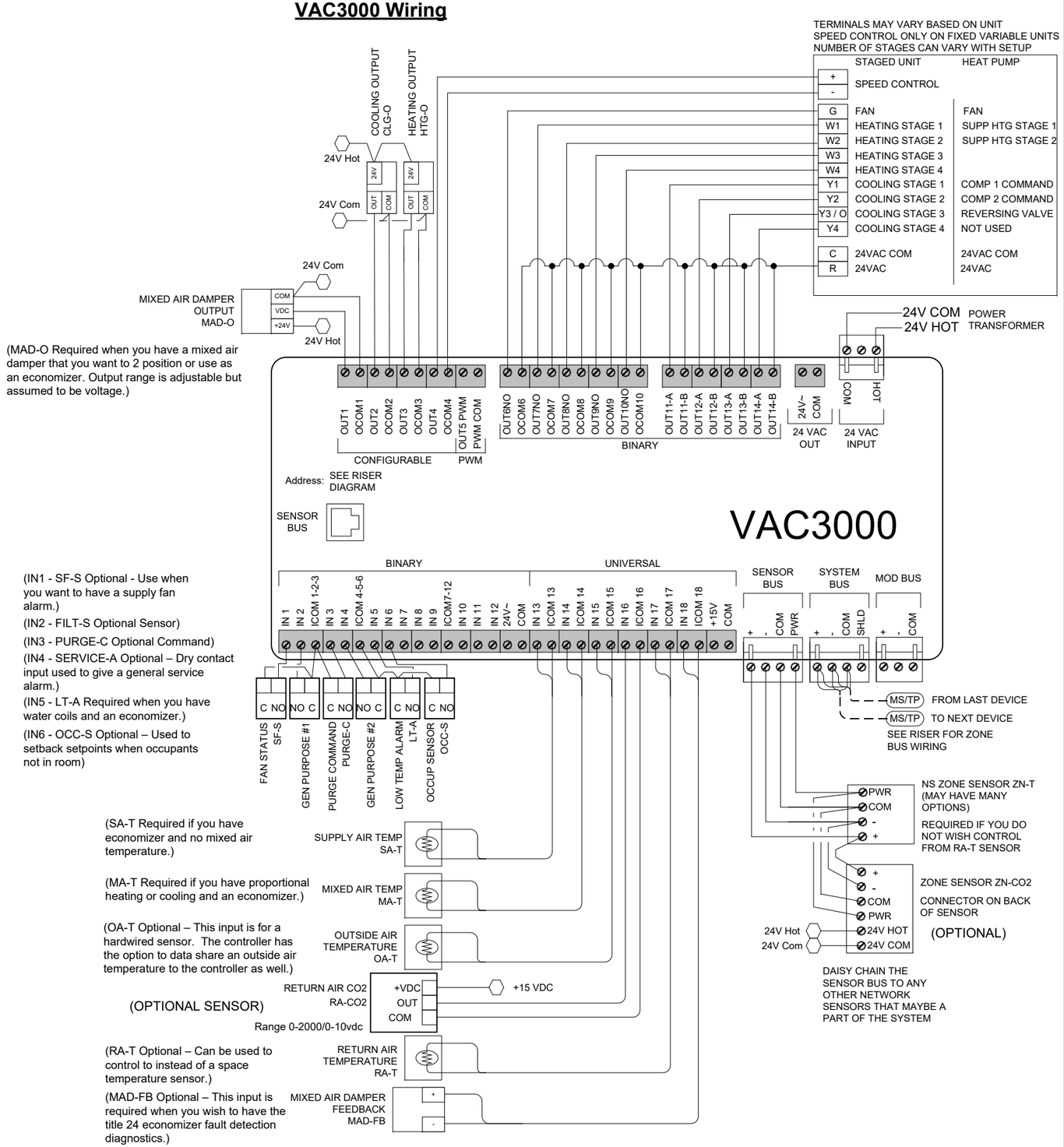

IOM3711 Wiring

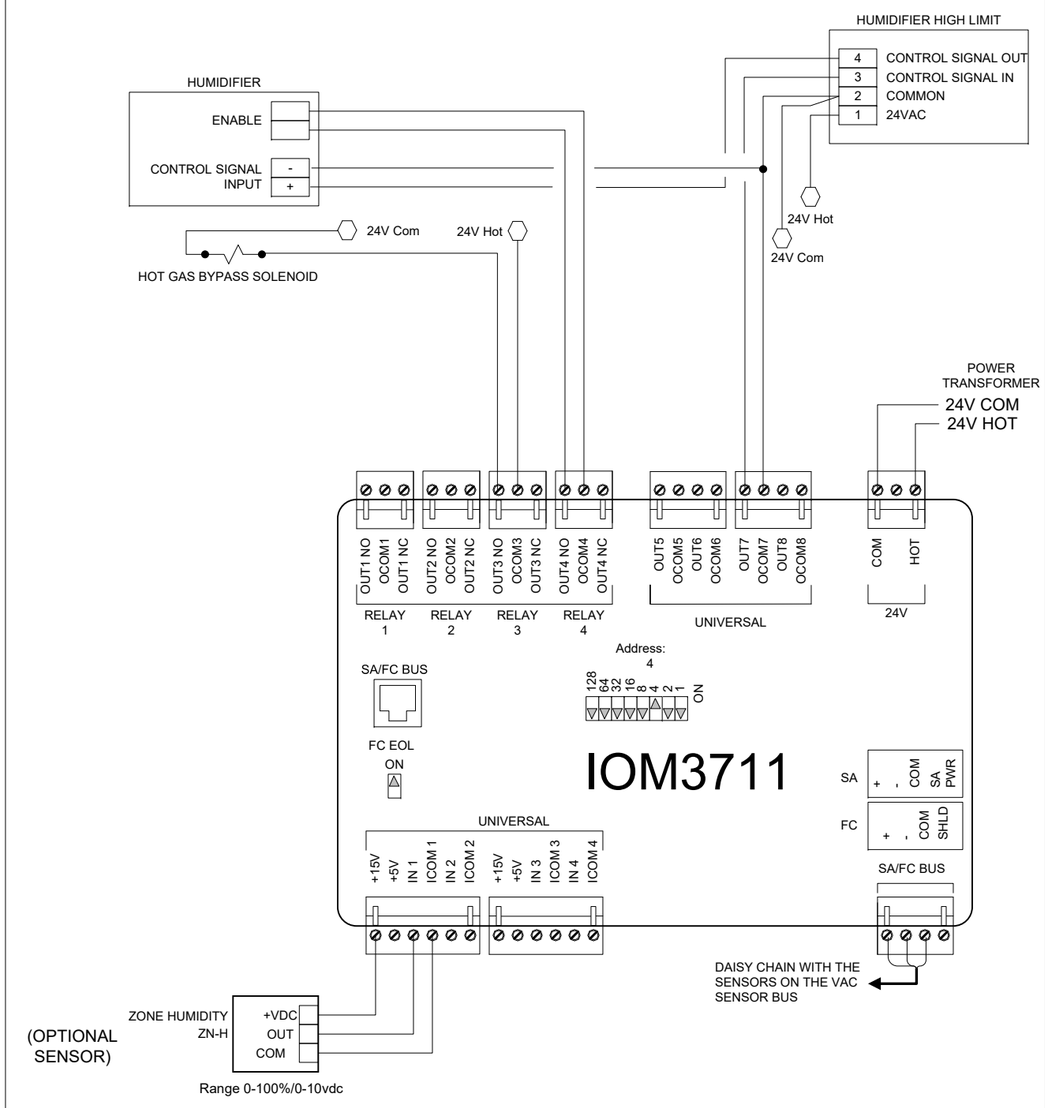

Drawing Title						
3rd Party Single Zone VAC3000 Wiring						
	REFERENCE DRAWING	NO.	REVISION-LOCATION	ECN	DATE	BY
	Sales Engineer / Project Manager / Application Engineer	DRAWN BY / DATE	APPROVED BY / DATE			
Project Title	VERASYS™	Branch Information	CONTRACT NUMBER			
			DRAWING NUMBER **VAC3000**			